REVISIONS		
ISS	ZONE	DESCRIPTION\PER REQUEST\DATE
	OPEN	對客戶公開圖紙
	OPEN	對供應商公開圖紙
	CLOSED	僅限廠內使用

Note(備註):
1. Box material: Aluminum
   Surface treatment: Black oxidation
   All printing trademark is carved by laser.
   (盒體材質: 鋁,
   表面處理: 黑色氧化處理
   所有印字均為雷射印字)

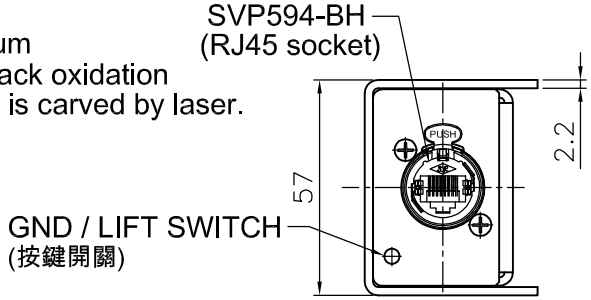

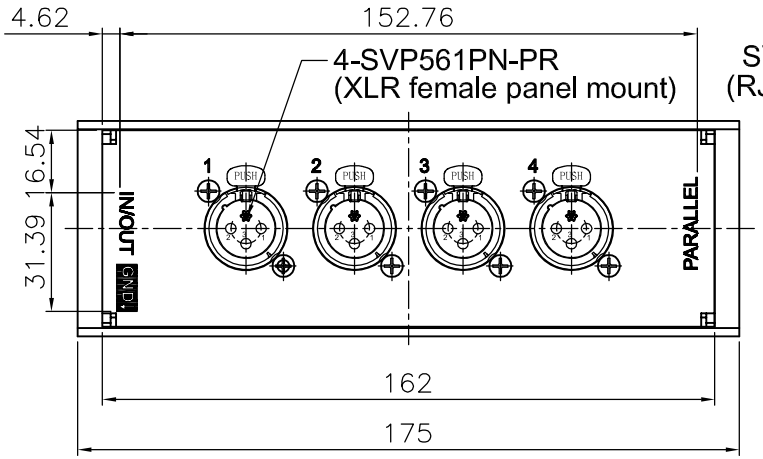

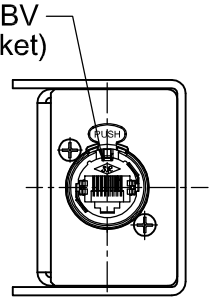

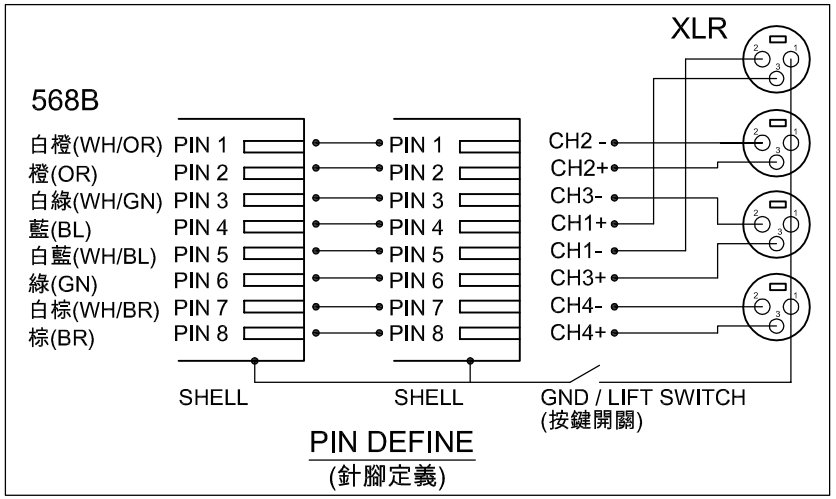

PIN DEFINE
(針腳定義)

台灣日昇電子股份有限公司
ISSUE APPROVED
發 行 核 可
本文件與簽核紙本正本相符

DIMENSIONS ARE IN MILLIMETERS	APPROVED	DATE 2019-05-10	日昇電子股份有限公司 SUN RISE EXACT INDUSTRIAL CO.
UNLESS OTHERWISE SPECIFIED TOLERANCES ANGLES = ±5° UP TO 6 = ±0.2 6–40 = ±0.4 40–120 = ±0.6 120–315 = ±1 ABOVE 315 = ±1.6	CHECKED	DATE	
	DRAWN 吳碧珊	DATE 2019-04-29	TITLE NETWORK SOCKET RJ45 TO 4x FEMALE XLR DMX CONVERTER
	FILE NO. D:\CAD\SGB\5204010353_ SGB-RZ4F_CA001A1		
THIRD_ANGLE	ERP LINK: 5204010353		PART NO. SGB-RZ4F REV. A1
SCALE 1/2			